nati per il freddo

DRY-HOT Showcases

FLAT SERIES

Use
and Maintenance Manual

CIAM Spa
06081 - Petrignano d'Assisi
PG – Italy
tel. 075 80161
Fax 075 8016215
http://www.ciamgroup.it
e-mail: info@ciamgroup.it

1. INTRODUCTION

PRESENTATION

Dear Client,

Ciam S.p.A. is pleased to number you among its customers and relies the bought machine will match your expectation. In order to get the best performances of the machine, we recommend you to follow all suggestions and instructions, which are included in this manual.

1.2. HOW TO USE THE MACHINE

- *PERMITTED USES*

The showcase cabinet has been manufactured for display of **hot products.**

- *NOT PERMITTED USES*

It is absolutely forbidden the use of the refrigerated display cabinet for **pharmaceutical products**.

1.3. RESPECTED NORMS

The refrigerated display cabinet has been manufactured in respect of the safety issues relevant to the following norm:

- **Machinery Directive** N° 2006/42/CE : EC marking for machinery, in place of previous 98/37/EC.
- **Directive** N° 2006/95/CE : Low tension
- **Directive** N° 2004/108/CE : Electro-magnetic Compatibility
- **Norm** CEI 17-13/1 (EN 60439/1) : Realization of Electric Installations
- **Norm** CEI EN 60335-1 (CEI 61-150) : Safety of household and similar electrical appliances
- **UL 197** CAN/CSA C22.2 No 109-M1981 : Standard for commercial electric Cooking Appliance
- **NSF 4** : Standard for commercial electric Cooking Appliance

1.4. RESPONSIBILITY

CIAM S.p.A. declines any responsibility relevant to damages on persons, animals and/or products in case of:

- No respect of in force norms
- Installation, which is not conform to the instructions manual
- No observance of all maintenance operations, which are suggested in this manual
- No previously agreed change operations with the manufacturer
- No proper use of the refrigerated display cabinet, for which the machine has been produced.

1.5. WARNING

Anytime CIAM S.p.A. reserves the right to up-date the content of this manual and/or to modify the product in order to improve its quality and performance, without any previous notice and/or communication.

2. DISPLAY CASE DATA PLATE

2.1. DATA PLATE CONTENT

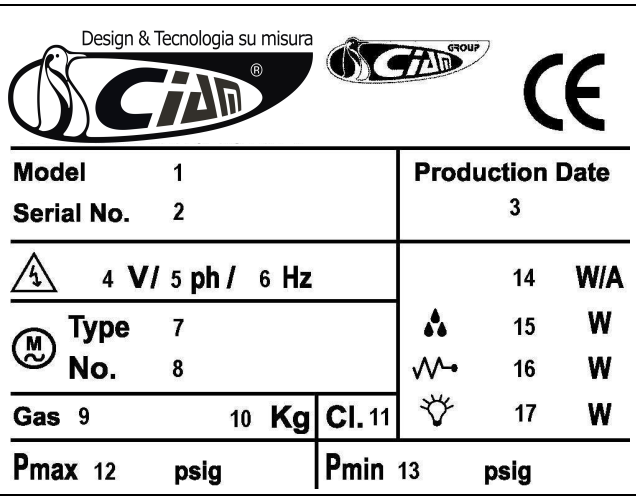

1. Commercial name of the unit
2. Identification number
3. Production date
4. Voltage
5. Phases
6. Frequency
7. Compressor type
8. Number of compressor
9. Refrigerant type
10. Refrigerant weight
11. Climatic rate (Cl.3 = +25°C/60% U.R.; Cl. 4 = +30°C/55% U.R.)
12. Test pressure – system high pressure side
13. Test pressure – system low pressure side
14. Nominal power/current absorbed during defrost
15. Max. power absorbed during defrost
16. Nominal power absorbed by heating elements (only if higher than 100W)
17. Lighting nominal power

3. THECNICAL FEATURES

FEATURES		CS 10	CS 15	CS 20
Dimension	(mm)	See thecnical drawing		
weight	(kg)	132 ÷ 161	169 ÷ 214	198 ÷ 265
Power supply	(V/ph/Hz)	230 / 1 / 50		
Heating element type		Electric		
Working temperature	(°C)	+80		
Heated area	(m^2)	0,53	0,7	1,06
Heating element — Type		22RS450A (640x480, 450W) - 22RS135A (470x220, 135W)		
Heating element — Number x Power	(N°xW)	1 x 135 + 1 x 450	2 x 450	2 x 450 + 2 x 135
Heating element — Heating element power	(W)	585	900	1770
Power/current absorbed	(W/A)	625/4,4	970/5,0	1.290/8,7
Lighting	(W)	1 x 18	1 x 36	1 x 58
Glasses		optional		
Fron glass opening		optional		

4. PARAMETER

Parameter	Range	Levell	Value	Unit measure
Set	LS ÷ US (vedi sotto)	---	80	°C
Hy	0,1 ÷ 25.5	Pr1	2	°C
LS	-50 + Set	Pr2	40	°C
US	Set + 110	Pr2	90	°C
Ods	0 ÷ 255	Pr2	0	min.
AC	0 ÷ 30	Pr1	0	min.
CCt	0 ÷ 23h 50min.	Pr2	0	min.
COn	0 ÷ 255	Pr2	10	min.
COF	0 ÷ 255	Pr2	5	min.
CH	CL = freddo, HT = caldo	Pr2	HT	-
CF	°C ÷ °F	Pr2	°C	-
rES	in = intero , de = decimale	Pr1	in	-
EdF	in(intervalli fissi);Sd(smart def)	Pr2	in	-
IdF	1 ÷ 120	Pr1	0	ora
MdF	0 ÷ 255	Pr1	0	min.
dFd	rt(temp.reale;it;Set;dEF;dEG	Pr2	rt	-
dAd	0 ÷ 255	Pr2	0	min.
dPO	n(no) ; y (si)	Pr2	n	-
dAF	0 ÷ 23h 50min.	Pr2	0	h,min.
ALC	rE ÷ Ab	Pr2	Ab	-
ALU	-50 ÷ +110	Pr1	+110	°C
ALL	-50 ÷ +110	Pr1	-50	°C
AFH	0,1 ÷ 25.5	Pr2	2	°C
ALd	0 ÷ 255	Pr2	15	min.
dAO	0 ÷ 23h 50min.	Pr2	1.3	h,min.
EdA	0 ÷ 255	Pr2	0	min.
Ot	-12 ÷ +12	Pr1	0	°C
PbC	Ptc, ntc	Pr2	ntc	-
rEL	---	Pr2	2.0	-
Ptb	---	Pr2	-	-
Prd	Pb1 ÷ Pb2	Pr2	-	-
Pr2	---	Pr1	-	-

5. INSTALLATION

5.1. MACHINE HANDLING

- The display cabinet handling, from the truck to the final place, has to be made by any truck-lift, which is proper to its weight. The display cabinet shall be always balanced in order to ensure personnel integrity and machine functionality.

- The cabinet can be shipped with or without wood packaging, in case wood crate will be used, will have a pallet base for an easy fork-lift handling. The pallet, however should be handle in the central position

- During the shipment, it is necessary to avoid any crash or/and shake of the display cabinet in order to not damage its frame, especially its glasses.

- Do not drag the display cabinet on the floor and do not push it on the upper glasses.

5.2. STOCK OF THE DISPLAY CABINET

- Whenever the cabinet has to be stoked, follow carefully what suggested before.
- Environmental temperature during the cabinet stock can have following range -15°C and + 55°C and humidity between 30% and 90%.
- The display cabinet has always to be protected by sunrays and raining.
- In case the display cabinet has to remain in stock quite long time before its use, keep it with its packaging in order to maintain its protection.

5.3. PACKAGING REMOVE

Before getting the display cabinet from the forwarding agent, check its conditions. In case it will be some damages, inform the driver and sign it on shipping documents. **Eventual damages relevant to the shipment and/or to the wrong stock, have not to be ascribed to the manufacturer.**

5.4. DISPLAY CABINET POSITION

The refrigerated display cabinet needs particular environmental conditions in order to offer the right performance, so that the area where it will be used has to respect following indications

- Floor has to be levelled perfectly, on the contrary keep the display cabinet on the horizontal position in order to guarantee a perfect defrosting water drain and avoid boring compressor noise.

- The display cabinet has not to be under air currents due to open doors or windows, or under roof ventilators or under air condition outlets. In case will be not respected the above suggestions it can arise an incorrect temperature of the displayed product.

- The display cabinet has not to be placed close any heat source as heaters, ovens, etc.

- The display cabinet has to have a sufficient place in order to ensure a correct custom service, to make an easy maintenance operation, to guarantee the right air flow necessary to make cold the condenser. Besides the warm air which flows out has to no have any obstacle or to invest other equipments in order to not reduce the correct functions.

5.6. ELECTRICAL CONNECTION

- Before proceeding with electrical connection, be sure that the available electric power and tension are what is required on technical label of the cabinet.
- The electric connection has to be made by qualified personnel and following manufacturer's instructions taking into consideration the relevant norms in force.
- The display cabinet has already a general switch, however it is necessary an omni polar switch, with a minimum distance among the contacts of 3mm.
- It is obligatory that the display cabinet will be connected properly with an efficient ground socket.

WARNING! A wrong connection may occur always to persons, animals and things, where the manufacturer cannot be considered as responsible.

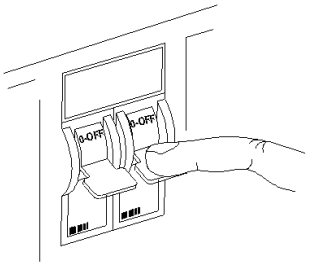

pic.5.6

WARNING!

Before any maintenance operation disconnect the electrical supply of thedisplay cabinet (pic.5.6).

6. ROUTINE MAINTENANCE AND PERIODIC CHECKS

- **These kinds of operations are at client's expenses.**
- In case some malfunctioning of the unit are observed, please make sure this is not due to non-maintenance reasons, before you apply to qualified assistance.
- The accurate and periodic cleaning of the unit will reduce the risk of damages to the unit itself and to the products stored within.
- See following tab for reference.

ATTENTION ! Before starting any maintenance and cleaning operation make sure you operate on the main switch in order to deactivate tension **(pic. 6)**

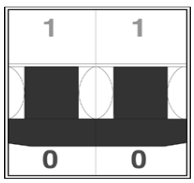

(pic.6)

MAINTENANCE OPERATIONS AND THIR FREQUENCY. A SUMMARY TAB.

OPERATION	DESCRIPTION	FREQUENCY
Stainless stell surfaces' cleaning	• Wash exclusively with warm water and neutral soup; rinse abundantly and wipe off with a soft cloth. • Do not use abrasive products	weekly
Plastic surfaces' cleaning	• Wash exclusively with warm water and neutral soup; rinse abundantly and wipe off with a soft cloth. • Do not use alcohol, acetone and any solvent that might spoil the look and structure of the material.	weekly
Glass surfaces' cleaning	• Use only specific products for glass cleaning • Using water alone might lead to calcareous deposits on the glass surfaces	daily
Wooden surfaces' cleaning	• Use exclusively a wet cloth.	weekly
ATTENTION! DO NOT CLEAN THE UNIT WITH WATER JETS		

REFRIGERATION AND ELECTRICAL SYSTEM CABLE CONNECTION GUIDE

AGD	DIGITAL FLAVOURS DISPLAY FEEDER
AEL	ELECTRONIC BALLAST
AP	SERVICE VALVE
CA	SUPPLY CABLE
CAR	AIR CONDENSER
CE	ELECTRONIC CONTROL
CN	MULTIPOLAR CONNECTOR
CO	COMPRESSOR
D	DIOD
DEV	SHUNT
DR	REMOTE DISPLAY
EM	PHOTOCELL EMITTER
EV	EVAPORATOR
F	FUSE
FD	FILTER DRIER
FLU	WATER FLOW SWITCH
FR	COMPRESSOR THERMAL PROTECTION
HL	COMPRESSOR ALARM LIGHT
I	GENERIC SWITCH
IEC	WATER EVAPORATION BIN SWITCH
IGD	DIGITAL FLAVOURS DISPLAY
II	LIGHTING SWITCH
IL	SIGHT GLASS
IMC	WARM SHELF SWITCH
INV	INVERTER
IR	REFRIGERATION SWITCH
IRP	LIGHT REFRIGERATION SWITCH
IV	INTERNAL FAN SWITCH
KM	CONTACTOR
LF	FRONT LIGHTING
LI	INTERNAL UPPER LIGHTING
LIA	FRONT LIGHTING
LIG	FLAVOURS DISPLAY LIGHTING
LIP	REAR LIGHTING
MDIG	DIGITAL MODULE FOR FLAVOURS DISPLAY
MM	SPINNING SHELVES ELECTRIC MOTOR
MUC	CONDENSING UNIT ELECTRIC CONNECTIONS
PA	HIGH PRESSURE CONTROL
PD	HIGH-LOW PRESSURE CONTROL
PO	WATER PUMP
QE	EXTERNAL ELECTRIC PANEL
QF	MAGNETIC-THERMIC SWITCH
R	LIGHTING BALLAST
RADD	RECTIFIER
RE	GENERIC RELAY
REL	ELECTRONIC BALLAST
REP	ELECTRONIC CONTROL TEMPERATURE REPEATER
RES1	COLD AIR DISCHARGE HEATING ELEMENT
RES2	FRONT PROFILE HEATING ELEMENT
RES3	RIGHT/LEFT GLASS HEATING ELEMENT
RES4	FRONT GLASS HEATING ELEMENT
RES5	DEFROST HEATING ELEMENT
RES6	WATER EVAPORATION HATING ELEMENT
RES7	TOP LIGHTING FIXTURE HEATING ELEMENT
RES8	LATERAL GLASS SUPPORT HEATING ELEMENT
RES9	FRONT BAND HEATING ELEMENT
RES10	COUPLING BAND HEATING ELEMENT
RES11	SERVICE TOP HEATING ELEMENT
RES12	UPPER BAND/DOOR FRAME HEATING ELEMENT
RES13	HOT DRY/BAIN MARIE DISPLAY HEATING ELEMENT
RES14	ANTI-FOG SUCTION AIR BAND HEATING ELEMENT
RES15	WARM SHELF HEATING ELEMENT
RES16	SIDE BANDS/ FRONT GLASS HINGE HEATING ELEMENT
RES17	DEHUMIDIFICATION HEATING ELEMENT
RES18	DEFROSTING WATER DRAIN HEATING ELEMENT
RES19	RING FRAME HEATING ELEMENT
RES20	SIDE BAND HEATING ELEMENT
RES21	SUCTION AIR GLASS HEATING ELEMENT
RES22	OUTLET AIR HEATING ELEMENT
RES23	REAR GLASS HEATING ELEMENT
RES24	INTERNAL GLASS HEATING ELEMENT
RES25	FRONT GLASS UPPER FRAME HEATING ELEMENT
RES26	FRONT GLASS LATERAL/LOWER FRAME HEATING ELEMENT
RES27	FRONT GLASS LATERAL FRAME HEATING ELEMENT
RES28	FRONT GLASS LOWER FRAME HEATING ELEMENT
RES29	FRONT GLASSES COUPLING PROFILE HEATING ELEMENT
RES30	DOORS FRAME MIDDLE POST HEATING ELEMENT
RES31	GLASSES PERIMETRAL FRAME HEATING ELEMENT
RES32	HEATED DOORS HEATING ELEMENTS
RES33	WATER DRAIN HEATING ELEMENT
RES34	DOORS FRAME HEATING ELEMENT
RES35	COMPRESSOR CRANKCASE HEATING ELEMENT
RES36	FRONT GLASS FRAME HEATING ELEMENT
RES37	CABINET FRAME HEATING ELEMENT
RES38	HOT COMPARTMENT HEATING ELEMENT
REV	CONDENSER FAN SPEED CONTROL
REVC	CONDENSER FAN RELAY
RI	REFRIGERANT TAP
RIC	COMPRESSOR DELAYER
RICV	PHOTOCELL RECEIVER
RIS	RESERVE , ANTI-FOG HEATER ELEMENT
RL	LIQUID RECEIVER
RLA	WATER LEVEL ELECTRONIC CONTROL
RO	OIL HEATER ELEMENT
SAA	ABSENCE OF WATER LIGHT
SC	CONDENSER PROBE
SD	TERMINAL BOX
SDC	COMPRESSOR TERMINAL BOX
SE	PROXIMITY SENSOR
SEC	MAIN SWITCH
SFV	TANK BOTTOM HEATING COIL
SIDG	FLAVOURS DISPLAY DIGITAL SYSTEM
SL	LIQUID SEPARATOR
SLA	WATER LEVER PROBE
SPC	COMPRESSOR LIGHT
SPMC	WARM SHELF LIGHT
SPR	ELECTRIC SUPPLY LIGHT
SPS	DEFROSTING LIGHT
SS	DEFROSTING PROBE
ST	TEMPERATURE PROBE
STR	LIGHTING STARTER
SU	HUMIDITY PROBE
T	TEMPERATURE CONTROL
TI	WINTER THERMOSTAT
TC	CAPILLARY TUBE
TE	TIMER
TER	THERMOMETER
TF	FUSIBLE PLUG
TMC	WARM SHELF THERMOSTAT
TP	LIGHTING FIXTURES REGRIGERATOR THERMOSTAT
TRA	TRANSFORMER
TRC	ELECTRONIC CONTROL TRANSFORMER
TREV	WATER EVAPORATION HEATER ELEMENT THERMOSTAT
TS	SECURITY THERMOSTAT
TVC	CONDENSER FAN THERMOSTAT
V	COMPRESSOR FAN / GENERAL USE
VC	CONDENSER FAN
VEC	WATER EVAPORATION BIN
VES	EXPANSION VALVE
VI	INTERNAL FAN
VPA	CONDENSING PRESSURE CONTROL WATER VALVE
VR	CHECK VALVE
VRA	SUCTION PRESSURE REGULATION VALVE
VRE	EVAPOTATING PRESSURE REGUTATION VALVE
VS	GENERAL USE SOLENOID VALVE
VSA	SOLENOID WATER VALVE
VSAB	BY-PASS SOLENOID WATER VALVE
VSIC	REVERSING CYCLE SOLENOID VALVE
VSL	LIQUID SOLENOID VALVE
VSS	DEFROSTING SOLENOID VALVE
VT	POWER REGULATOR
VV	GLASS FAN
X1	CABINET CONNECTIONS
X2	EXTERNAL ELECTRIC PANEL CONNECTIONS
X3	CONDENSING UNIT CONNECTIONS

Design & Tecnologia su misura

CONTROLLO DIGITALE

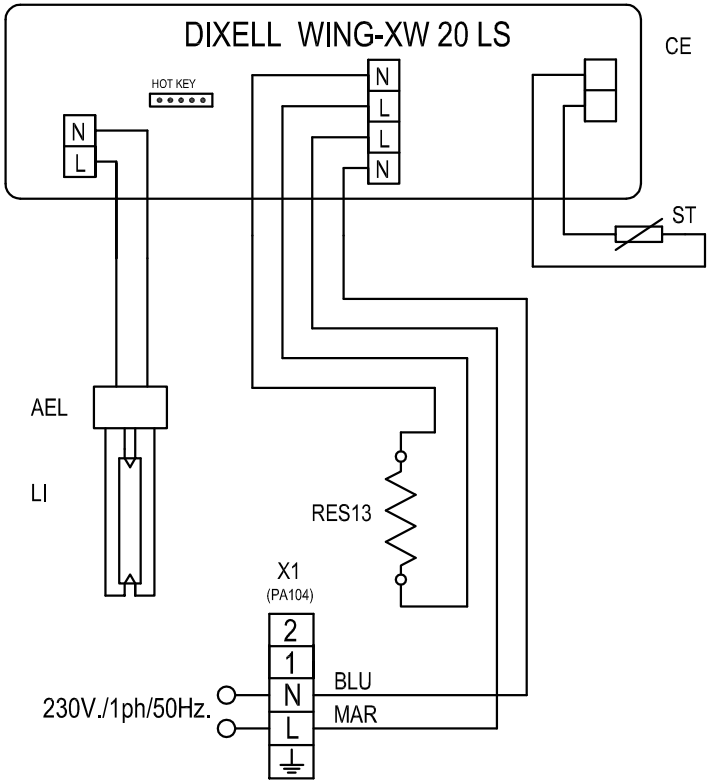

CONTROLLO ELETTROMECCANICO

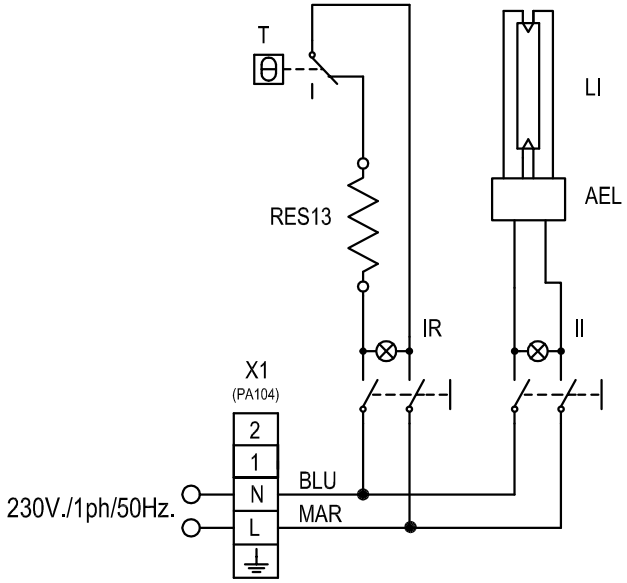

ATTENZIONE !
PRIMA DI QUALSIASI INTERVENTO DI MANUTENZIONE TOGLIERE TENSIONE AGENDO SULL'INTERRUTTORE GENERALE OBBLIGATORIAMENTE PRESENTE (NON FORNITO)

Design & Tecnologia su misura

Viale dei Pini, 9
06081 Petrignano d'Assisi
Perugia - Italy
Phone:075 80161 Fax 075 8016215
www.ciamgroup.it - mail:
mabo@ciamgroup.it

Rugosità - Ra 3,2

QUOTE SENZA INDICAZIONE DI TOLLERANZA - Grado di precisione medio UNI 5307

0÷6	6÷30	30÷120	120÷315	315÷1000	1000÷2000	3÷6	6÷30	30÷120	oltre 120	Smussi e Raggi
±0,06	±0,1	±0,15	±0,2	±0,3	±0,5	±1°	e 30'	e 20'	e 10'	0,3÷0,8

TRATT. SUPERFICIALE
Togliere Bavature
Toll. generali vedi tabella

REV.	DATA	DESCRIZIONE	VERIFICA	APPROVAZIONE
	17/01/07	EMISSIONE		

DENOMINAZIONE: Schema elettrico funzionale
Vetrina calda a bagnomaria Serie 600-800 FLAT mod. V6CB-V8CB
Vetrina calda a secco Serie 600-800 FLAT mod. V6CS-V8CS

SCALA

MATERIALE | Q.tà
FINITURA | Peso (Kg)

DESIGNER: Mattiacci Franco
DATA: 17/ 01/07

P / N: SEF 245-07

FOGLIO

A termini di legge ci riserviamo la proprietà di questo disegno con divieto di riprodurlo o renderlo noto a terzi senza nostra approvazione

Certified Quality System ISO 9001:2000

Digital controller with off cycle defrost
XW20LS

1. GENERAL WARNING

1.1 PLEASE READ BEFORE USING THIS MANUAL

- This manual is part of the product and should be kept near the instrument for easy and quick reference.
- The instrument shall not be used for purposes different from those described hereunder. It cannot be used as a safety device.
- Check the application limits before proceeding.

1.2 ⚠ SAFETY PRECAUTIONS

- Check the supply voltage is correct before connecting the instrument.
- Do not expose to water or moisture: use the controller only within the operating limits avoiding sudden temperature changes with high atmospheric humidity to prevent formation of condensation
- Warning: disconnect all electrical connections before any kind of maintenance.
- Fit the probe where it is not accessible by the End User. The instrument must not be opened.
- In case of failure or faulty operation send the instrument back to the distributor or to "Dixell S.p.A." (see address) with a detailed description of the fault.
- Consider the maximum current which can be applied to each relay (see Technical Data).
- Ensure that the wires for probes, loads and the power supply are separated and far enough from each other, without crossing or intertwining.
- In case of applications in industrial environments, the use of mains filters (our mod. FT1) in parallel with inductive loads could be useful.

2. GENERAL DESCRIPTION

Model **XW20LS**, format 38x185mm, is a digital thermostat with off cycle defrost designed for refrigeration applications at normal temperature. It has 2 relay outputs to control compressor and light.. It could be provided with a Real Time Clock which allows programming of up to 6 daily defrost cycles, divided into holidays and workdays. A "Day and Night" function with two different set points is fitted for energy saving. It is also provided with up to 2 NTC or PTC probe inputs, the first one for temperature control, the second one, to be located onto the evaporator and to control the defrost termination temperature. The digital input can operate as third temperature probe, to signal the condenser temperature alarm or to display a temperature.
The HOT KEY output allows to connect the unit, by means of the external module XJ485-CX, to a network line **ModBUS-RTU** compatible such as the **dixell** monitoring units of X-WEB family. It allows to program the controller by means the HOT KEY programming keyboard.
The instrument is fully configurable through special parameters that can be easily programmed through the keyboard.

3. CONTROLLING LOADS

3.1 COMPRESSOR

The regulation is performed according to the temperature measured by the thermostat probe with a positive differential from the set point: if the temperature increases and reaches set point plus differential the compressor is started and then turned off when the temperature reaches the set point value again.

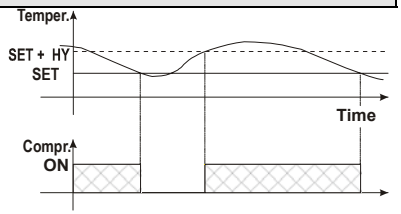

In case of fault in the thermostat probe the start and stop of the compressor are timed through parameters "**COn**" and "**COF**".

3.2 DEFROST

Defrost is performed through a simple stop of the compressor. The defrost interval depends on the presence of the RTC (optional). If the RTC is present is controlled by means of parameter "**EdF**":
- with EdF=in the defrost is made every "**IdF**" time – standard way for controller without RTC.
- with EdF = "rtc", the defrost is made in real time depending on the hours set in the parameters **Ld1..Ld6** on workdays and in **Sd1…Sd6** in holidays;

Other parameters are used to control defrost cycles: its maximum length (MdF) and two defrost modes: timed or controlled by the evaporator's probe (P2P).

4. FRONT PANEL COMMANDS

4.1 STANDARD FRONTAL PANEL

4.2 STEEL FINISHING

SET: To display target set point; in programming mode it selects a parameter or confirm an operation.

(DEF) To start a manual defrost

(UP): To see the max. stored temperature; in programming mode it browses the parameter codes or increases the displayed value.

(DOWN) To see the min stored temperature; in programming mode it browses the parameter codes or decreases the displayed value.

To switch the instrument off.

To switch the light.

KEY COMBINATIONS:

UP + DOWN To lock & unlock the keyboard.

SET + DOWN To enter in programming mode.

SET + UP To return to the room temperature display.

4.3 USE OF LEDS

Each LED function is described in the following table.

LED	MODE	FUNCTION
	ON	Compressor enabled
	Flashing	Anti-short cycle delay enabled
	ON	Defrost enabled
	Flashing	Drip time in progress
	ON	An alarm is occurring
	ON	Continuous cycle is running
	ON	Energy saving enabled
	ON	Light on
°C/°F	ON	Measurement unit
°C/°F	Flashing	Programming phase

5. MAX & MIN TEMPERATURE MEMORIZATION

5.1 HOW TO SEE THE MIN TEMPERATURE

1. Press and release the ▼ key.
2. The "Lo" message will be displayed followed by the minimum temperature recorded.
3. By pressing the ▼ key again or by waiting 5s the normal display will be restored.

5.2 HOW TO SEE THE MAX TEMPERATURE

1. Press and release the ▲ key.
2. The "Hi" message will be displayed followed by the maximum temperature recorded.
3. By pressing the ▲ key again or by waiting 5s the normal display will be restored.

5.3 HOW TO RESET THE MAX AND MIN TEMPERATURE RECORDED

1. Hold press the SET key for more than 3s, while the max. or min temperature is displayed. (rSt message will be displayed)
2. To confirm the operation the "rSt" message starts blinking and the normal temperature will be displayed.

6. MAIN FUNCTIONS

6.1 TO SET THE CURRENT TIME AND DAY (ONLY FOR INSTRUMENTS WITH RTC)

When the instrument is switched on, it's necessary to program the time and day.
1. Enter the Pr1 programming menu, by pushing the SET + ▼ keys for 3s.
2. The rtc parameter is displayed. Push the SET key to enter the real time clock menu.
3. The Hur (hour) parameter is displayed.
4. Push the SET and set current hour by the UP and Down keys, then push SET to confirm the value..
5. Repeat the same operations on the Min (minutes) and dAy (day) parameters.

To exit: Push SET+UP keys or wait for 15 sec without pushing any keys.

6.2 HOW TO SEE THE SET POINT

1. Push and immediately release the **SET** key: the display will show the Set point value;
2. Push and immediately release the **SET** key or wait for 5 seconds to display the probe value again.

6.3 HOW TO CHANGE THE SET POINT

1. Push the **SET** key for more than 2 seconds to change the Set point value;
2. The value of the set point will be displayed and the **"°C" or "°F"** LED starts blinking;
3. To change the Set value push the ▲ or ▼ arrows within 10s.
4. To memorise the new set point value push the **SET** key again or wait 10s.

6.4 HOW TO START A MANUAL DEFROST

Push the **DEF** key for more than 2 seconds and a manual defrost will start.

6.5 HOW TO CHANGE A PARAMETER VALUE

To change the parameter's value operate as follows:
1. Enter the Programming mode by pressing the **Set** + ▼ keys for 3s (the **"°C" or "°F"** LED starts blinking).
2. Select the required parameter. Press the "**SET**" key to display its value

3. Use "**UP**" or "**DOWN**" to change its value.
4. Press "**SET**" to store the new value and move to the following parameter.

To exit: Press **SET + UP** or wait 15s without pressing a key.
NOTE: the set value is stored even when the procedure is exited by waiting the time-out to expire.

6.6 THE HIDDEN MENU

The hidden menu Includes all the parameters of the instrument.

6.6.1 HOW TO ENTER THE HIDDEN MENU

1. Enter the Programming mode by pressing the **Set** + ▼ keys for 3s (the "**°C" or "°F"** LED starts blinking).
2. Released the keys, then push again the Set+ ▼ keys for more than 7s. The Pr2 label will be displayed immediately followed from the HY parameter.
   NOW YOU ARE IN THE HIDDEN MENU.
3. Select the required parameter.
4. Press the "**SET**" key to display its value
5. Use ▲ or ▼ to change its value.
6. Press "**SET**" to store the new value and move to the following parameter.

To exit: Press **SET +** ▲ or wait 15s without pressing a key.
NOTE1: if none parameter is present in Pr1, after 3s the "noP" message is displayed. Keep the keys pushed till the Pr2 message is displayed.
NOTE2: the set value is stored even when the procedure is exited by waiting the time-out to expire.

6.6.2 HOW TO MOVE A PARAMETER FROM THE HIDDEN MENU TO THE FIRST LEVEL AND VICEVERSA.

Each parameter present in the HIDDEN MENU can be removed or put into "THE FIRST LEVEL" (user level) by pressing **"SET +** ▼**"**.
In HIDDEN MENU when a parameter is present in First Level the decimal point is on.

6.7 HOW TO LOCK THE KEYBOARD

1. Keep pressed for more than 3 s the **UP** + **DOWN** keys.
2. The "POF" message will be displayed and the keyboard will be locked. At this point it will be possible only to see the set point or the MAX o Min temperature stored
3. If a key is pressed more than 3s the "POF" message will be displayed.

6.8 TO UNLOCK THE KEYBOARD

Keep pressed together for more than 3s the ▲ and ▼ keys, till the **"Pon"** message will be displayed.

6.9 THE CONTINUOUS CYCLE

When defrost is not in progress, it can be activated by holding the "▲" key pressed for about 3 seconds. The compressor operates to maintain the "**ccS**" set point for the time set through the "**CCt**" parameter. The cycle can be terminated before the end of the set time using the same activation key "▲" for 3 seconds.

6.10 THE ON/OFF FUNCTION

With "**onF = oFF**", pushing the **ON/OFF** key, the instrument is switched off. The **"OFF"** message is displayed. In this configuration, the regulation is disabled.
To switch the instrument on, push again the ON/OFF key.

WARNING: Loads connected to the normally closed contacts of the relays are always supplied and under voltage, even if the instrument is in stand by mode.

7. PARAMETERS

rtc Real time clock menu (only for controller with RTC): to set the time and date and defrost start time.

REGULATION

Hy Differential: (0,1 ÷ 25,5°C / 1÷255 °F) Intervention differential for set point. Compressor Cut IN is Set Point + differential (Hy). Compressor Cut OUT is when the temperature reaches the set point.
LS Minimum set point: (- 50°C÷SET/-58°F÷SET): Sets the minimum value for the set point.
US Maximum set point: (SET÷110°C/ SET÷230°F). Set the maximum value for set point.
Ot Thermostat probe calibration: (-12.0÷12.0°C; -120÷120°F) allows to adjust possible offset of the thermostat probe.
P2P Evaporator probe presence: n= not present: **y=** present:
OE Evaporator probe calibration: (-12.0÷12.0°C; -120÷120°F). allows to adjust possible offset of the evaporator probe.
P3P Third probe presence (P3): n= not present:, the terminals operate as digital input.; **y=** present:, the terminals operate as third probe.
O3 Third probe calibration (P3): (-12.0÷12.0°C; -120÷120°F). allows to adjust possible offset of the third probe.
OdS Outputs activation delay at start up: (0÷255min) This function is enabled at the initial start up of the instrument and inhibits any output activation for the period of time set in the parameter.
AC Anti-short cycle delay: (0÷50 min) minimum interval between the compressor stop and the following restart.
rtr Percentage of the second and first probe for regulation (0÷100; 100 = P1, 0 = P2): it allows to set the regulation according to the percentage of the first and second probe, as for the following formula (rtr(P1-P2)/100 + P2).
CCt Compressor ON time during continuous cycle: (0.0÷24.0h; res. 10min) Allows to set the length of the continuous cycle: compressor stays on without interruption for the CCt time. Can be used, for instance, when the room is filled with new products.
CCS Set point for continuous cycle: (-50÷150°C) it sets the set point used during the continuous cycle.
COn Compressor ON time with faulty probe: (0÷255 min) time during which the compressor is active in case of faulty thermostat probe. With COn=0 compressor is always OFF.
COF Compressor OFF time with faulty probe: (0÷255 min) time during which the compressor is OFF in case of faulty thermostat probe. With COF=0 compressor is always active.
CH Type of action: CL = cooling; Ht = heating.

DISPLAY

CF Temperature measurement unit: °C=Celsius; **°F**=Fahrenheit. WARNING: When the measurement unit is changed the SET point and the values of the parameters Hy, LS, US, Ot, ALU and ALL have to be checked and modified if necessary).
rES Resolution (for °C): (in = 1°C; dE = 0.1 °C) allows decimal point display.
Lod Instrument display: (P1; P2, P3, P4, SET, dtr): it selects which probe is displayed by the instrument: **P1** = Thermostat probe; **P2** = Evaporator probe; **P3** = Third probe(only for model with this option enabled); **P4** = NOT SET IT, **SET** = set point; **dtr** = percentage of visualization.
rEd X- REP display (*optional*): (P1; P2, P3, P4, SET, dtr): it selects which probe is displayed by X- REP: **P1** = Thermostat probe; **P2** = Evaporator probe; **P3** = Third probe(only for model with this option enabled); **P4** = NOT SET IT, **SET** = set point; **dtr** = percentage of visualization.
dLy Display delay: (0 ÷20.0m; resul. 10s) when the temperature increases, the display is updated of 1 °C/1°F after this time.
dtr Percentage of the second and first probe for visualization when Lod = dtr (0÷100; 100 = P1, 0 = P2): if Lod = dtr it allows to set the visualization according to the percentage of the first and second probe, as for the following formula (dtr(P1-P2)/100 + P2).

DEFROST

EdF Defrost mode (only for controller with RTC): rtc = **Real Time Clock mode**. Defrost time follows **Ld1÷Ld6** parameters on workdays and **Sd1÷Sd6** on holidays.
in = **interval mode**. The defrost starts when the time "**Idf**" is expired.
dFP Probe selection for defrost termination: nP = no probe; **P1** =thermostat probe; **P2 =** evaporator probe; **P3** =configurable probe; **P4** = NOT SET IT.
dtE Defrost termination temperature: (-50÷50 °C/ -58÷122°F) (Enabled only when EdF=Pb) sets the temperature measured by the evaporator probe, which causes the end of defrost.
IdF Interval between defrost cycles: (0÷120h) Determines the time interval between the beginning of two defrost cycles.
MdF (Maximum) length for defrost: (0÷255min) When **P2P = n**, (not evaporator probe: timed defrost) it sets the defrost duration, when **P2P = y** (defrost end based on temperature) it sets the maximum length for defrost.
dFd Temperature displayed during defrost: (**rt** = real temperature; **it** = temperature at defrost start; **SEt** = set point; **dEF** = "dEF" label)
dAd MAX display delay after defrost: (0÷255min). Sets the maximum time between the end of defrost and the restarting of the real room temperature display.

ALARMS

ALP Probe selection for alarm: **nP** = no probe, the temperature alarms are disabled; **P1 =** Probe 1 (Thermostat probe); **P2 =** Probe 2 (evaporator probe); **P3 =** Probe 3 (display probe); **P4 =** NOT SET IT.
ALC Temperature alarms configuration: (Ab; rE)
Ab= absolute temperature: alarm temperature is given by the ALL or ALU values. **rE** = temperature alarms are referred to the set point. Temperature alarm is enabled when the temperature exceeds the "SET+ALU" or "SET-ALL" values.
ALU MAXIMUM temperature alarm: (SET÷110°C; SET÷230°F) when this temperature is reached the alarm is enabled, after the "ALd" delay time.
ALL Minimum temperature alarm: (-50.0 ÷ SET °C; -58÷230°F when this temperature is reached the alarm is enabled, after the "ALd" delay time.
AFH Differential for temperature alarm recovery: (0,1÷25,5°C; 1÷45°F) Intervention differential for recovery of temperature alarm.
ALd Temperature alarm delay: (0÷255 min) time interval between the detection of an alarm condition and alarm signalling.
dAo Exclusion of temperature alarm at start-up: (from 0.0 min to 23.5h) time interval between the detection of the temperature alarm condition after instrument power on and alarm signalling.

CONDENSER TEMPERATURE ALARM

AP2 Probe selection for temperature alarm of condenser: nP = no probe; **P1** =thermostat probe; **P2 =** evaporator probe; **P3** =configurable probe; **P4** = NOT SET IT.
AL2 Low temperature alarm of condenser: (-55÷150°C) when this temperature is reached the LA2 alarm is signalled, possibly after the Ad2 delay.
Au2 High temperature alarm of condenser: (-55÷150°C) when this temperature is reached the HA2 alarm is signalled, possibly after the Ad2 delay.
AH2 Differential for temperature condenser alarm recovery: (0,1÷25,5°C; 1÷45°F)
Ad2 Condenser temperature alarm delay: (0÷255 min) time interval between the detection of the condenser alarm condition and alarm signalling.
dA2 Condenser temperature alarm exclusion at start up: (from 0.0 min to 23.5h, res. 10min)
bLL Compressor off with low temperature alarm of condenser: **n = no:** compressor keeps on working**; Y = yes,** compressor is switched off till the alarm is present, in any case regulation restarts after AC time at minimum.
AC2 Compressor off with high temperature alarm of condenser: **n = no:** compressor keeps on working**; Y = yes,** compressor is switched off till the alarm is present, in any case regulation restarts after AC time at minimum.

DIGITAL INPUT

i1P Digital input polarity: oP: the digital input is activated by opening the contact; **CL:** the digital input is activated by closing the contact.
i1F Digital input configuration: EAL= external alarm: "EA" message is displayed; **bAL**= serious alarm "CA" message is displayed. **PAL**= pressure switch alarm, "CA" message is displayed; **dor**= door switch function; **dEF**= activation of a defrost cycle; **AUS**=not enabled; **Htr**= kind of action inversion (cooling – heating); **FAn**= **not set it; ES**= Energy saving; **HdF** = Holiday defrost (enable only with RTC); **onF =** to switch the controller off.
did (0÷255 min) **with i1F= EAL or i1F = bAL digital input alarm delay (1-3):** delay between the detection of the external alarm condition and its signalling.
with i1F= dor: door open signalling delay
with i1F= PAL: time for pressure switch function: time interval to calculate the number of the pressure switch activation.
nPS Pressure switch number: (0 ÷15) Number of activation of the pressure switch, during the "**did**" interval, before signalling the alarm event (i1F= PAL).
If the nPS activation in the did time is reached, switch off and on the instrument to restart normal regulation.
odc Compressor status when open door: no, Fan = normal; **CPr, F_C** = Compressor OFF.
rrd Outputs restart after doA alarm: no= outputs not affected by the doA alarm; **yES =** outputs restart with the doA alarm.
HES Temperature increase during the Energy Saving cycle:
(-30,0°C÷30,0°C) it sets the increasing value of the set point during the Energy Saving cycle.

TO SET CURRENT TIME AND WEEKLY HOLIDAYS (ONLY FOR MODELS WITH RTC)

Hur Current hour (0 ÷ 23 h)
Min Current minute (0 ÷ 59min)

dAY **Current day** (Sun ÷ SAt)
Hd1 **First weekly holiday** (Sun ÷ nu) Set the first day of the week which follows the holiday times.
Hd2 **Second weekly holiday** (Sun ÷ nu) Set the second day of the week which follows the holiday times.
N.B. **Hd1,Hd2** can be set also as **"nu"** value (Not Used).

TO SET ENERGY SAVING TIMES (ONLY FOR MODELS WITH RTC)

ILE **Energy Saving cycle start during workdays**: (0 ÷ 23h 50 min.) During the Energy Saving cycle the set point is increased by the value in HES so that the set point is SET + HES.
dLE **Energy Saving cycle length during workdays**: (0 ÷ 24h 00 min.) Sets the duration of the Energy Saving cycle on workdays.
ISE **Energy Saving cycle start on holidays**. (0 ÷ 23h 50 min.)
dSE **Energy Saving cycle length on holidays** (0 ÷ 24h 00 min.)

TO SET DEFROST TIMES (ONLY FOR MODELS WITH RTC)

Ld1÷Ld6 Workday defrost start (0 ÷ 23h 50 min.) These parameters set the beginning of the 6 programmable defrost cycles during workdays. Ex. When **Ld2** = 12.4 the second defrost starts at 12.40 during workdays.
Sd1÷Sd6 Holiday defrost start (0 ÷ 23h 50 min.) These parameters set the beginning of the 6 programmable defrost cycles on holidays. Ex. When **Sd2** = 3.4 the second defrost starts at 3.40 on holidays.
N.B. :To disable a defrost cycle set it to "nu"(not used). ***Ex.*** *If **Ld6**=nu ; the sixth defrost cycle is disabled*

OTHER

Adr **Serial address** (1÷244): Identifies the instrument address when connected to a ModBUS compatible monitoring system.
PbC **Type of probe:** it allows to set the kind of probe used by the instrument: **PbC** = PBC probe, **ntc =** NTC probe.
onF **on/off key enabling: nu =** disabled; **oFF =** enabled; **ES = not set it**.
dP1 **Thermostat probe display**
dP2 **Evaporator probe display**
dP3 **Third probe display**- ***optional***.
rSE **Real set point:** it shows the set point used during the energy saving cycle or during the continuous cycle.
rEL **Software release** for internal use**.**
Ptb **Parameter table code:** readable only**.**

8. DIGITAL INPUT (ENABLED ONLY IF P3P = N)

8.1 GENERIC ALARM (i1F = EAL)

As soon as the digital input is activated the unit will wait for "**did**" time delay before signalling the "**EAL**" alarm message. The outputs status don't change. The alarm stops just after the digital input is de-activated.

8.2 SERIOUS ALARM MODE (i1F = bAL)

When the digital input is activated, the unit will wait for "**did**" delay before signalling the "**CA**" alarm message. The relay outputs are switched OFF. The alarm will stop as soon as the digital input is de-activated.

8.3 PRESSURE SWITCH (i1F = PAL)

If during the interval time set by "**did**" parameter, the pressure switch has reached the number of activation of the "**nPS**" parameter, the "**CA**" pressure alarm message will be displayed. The compressor and the regulation are stopped. When the digital input is ON the compressor is always OFF. **If the nPS activation in the did time is reached, switch off and on the instrument to restart normal regulation.**

8.4 DOOR SWITCH INPUT (i1F = dor)

It signals the door status and the corresponding relay output status through the "**odc**" parameter: **no, Fan** = normal (any change); **CPr, F_C** = Compressor OFF.
Since the door is opened, after the delay time set through parameter "**did**", the door alarm is enabled, the display shows the message "**dA**" and **the regulation restarts is rtr = yES.** The alarm stops as soon as the external digital input is disabled again. With the door open, the high and low temperature alarms are disabled.

8.5 START DEFROST (i1F = dEF)

It starts a defrost if there are the right conditions. After the defrost is finished, the normal regulation will restart only if the digital input is disabled otherwise the instrument will wait until the "MdF" safety time is expired.

8.6 INVERSION OF THE KIND OF ACTION: HEATING-COOLING (i1F =Htr)

This function allows to invert the regulation of the controller: from cooling to heating and viceversa.

8.7 ENERGY SAVING (i1F = ES)

The Energy Saving function allows to change the set point value as the result of the SET+ HES (parameter) sum. This function is enabled until the digital input is activated.

8.8 HOLIDAY DEFROST (i1F = HDF) –ONLY FOR MODELS WITH RTC

This function enabled the holiday defrost setting.

8.9 ON OFF FUNCTION (i1F = onF)

To switch the controller on and off.

8.10 DIGITAL INPUTS POLARITY

The digital input polarity depends on the "**i1P**" parameter.
i1P =CL: the input is activated by closing the contact.
i1P =OP: the input is activated by opening the contact

9. TTL SERIAL LINE – FOR MONITORING SYSTEMS

The TTL serial line, available through the HOT KEY connector, allows by means of the external TTL/RS485 converter, **XJ485-CX**, to connect the instrument to a monitoring system **ModBUS-RTU** compatible such as the X-WEB500/3000/300.

10. X-REP OUTPUT – OPTIONAL

As optional, an X-REP can be connected to the instrument, trough the HOY KEY connector. The X-REP output **EXCLUDES** the serial connection.

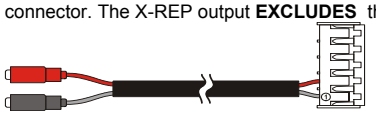

To connect the X-REP to the instrument the following connectors must be used CAB-51F(1m), CAB-52F(2m), CAB-55F(5m),

11. INSTALLATION AND MOUNTING

The controller **XW20LS**, shall be mounted on vertical panel, in a 150x31 mm hole, and fixed using two screws ∅ 3 x 2mm. To obtain an IP65 protection grade use the front panel rubber gasket (mod. RG-L). The temperature range allowed for correct operation is 0 - 60 °C. Avoid places subject to strong vibrations, corrosive gases, excessive dirt or humidity. The same recommendations apply to probes. Let the air circulate by the cooling holes.

11.1 CUT OUT

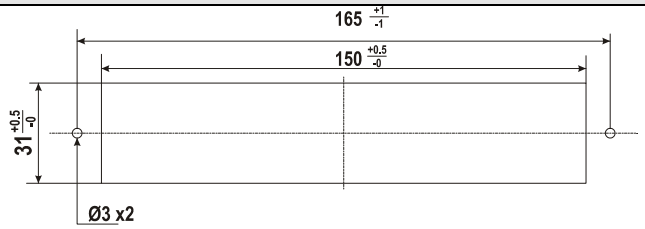

11.2 STEEL FINISHING MOUNTING

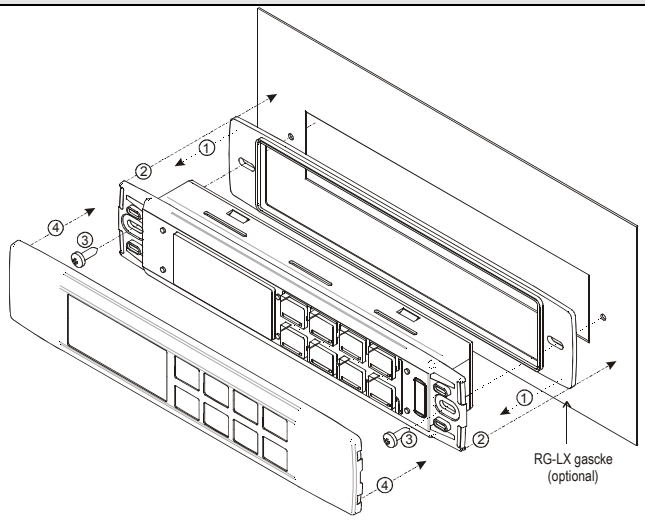

12. ELECTRICAL CONNECTIONS

The instruments are provided with screw terminal block to connect cables with a cross section up to 2,5 mm² for the digital and analogue inputs. Relays and power supply have a Faston connection (6,3mm). Heat-resistant cables have to be used. Before connecting cables make sure the power supply complies with the instrument's requirements. Separate the probe cables from the power supply cables, from the outputs and the power connections. Do not exceed the maximum current allowed on each relay, in case of heavier loads use a suitable external relay.
N.B. Maximum current allowed for all the loads is 20A.

12.1 PROBE CONNECTION

The probes shall be mounted with the bulb upwards to prevent damages due to casual liquid infiltration. It is recommended to place the thermostat probe away from air streams to correctly measure the average room temperature. Place the defrost termination probe among the evaporator fins in the coldest place, where most ice is formed, far from heaters or from the warmest place during defrost, to prevent premature defrost termination.

13. HOW TO USE THE HOT KEY

13.1 HOW TO PROGRAM A HOT KEY FROM THE INSTRUMENT (UPLOAD)

1. Program one controller with the front keypad.
2. When the controller is ON, insert the "**Hot key**" and push ▲ key; the **"uPL"** message appears followed a by flashing **"End"**
3. Push "**SET"** key and the **End** will stop flashing.
4. Turn OFF the instrument remove the **"Hot Key",** then turn it ON again.

NOTE: the "**Err**" message is displayed for failed programming. In this case push again ▲ key if you want to restart the upload again or remove the "**Hot key**" to abort the operation.

13.2 HOW TO PROGRAM AN INSTRUMENT USING A HOT KEY (DOWNLOAD)

1. Turn OFF the instrument.
2. Insert a **programmed "Hot Key" into the 5 PIN receptacle** and then turn the Controller ON.

3. Automatically the parameter list of the **"Hot Key"** is downloaded into the Controller memory, the "**doL**" message is blinking followed a by flashing **"End".**
4. After 10 seconds the instrument will restart working with the new parameters.
5. Remove the **"Hot Key"**..

NOTE the message "**Err**" is displayed for failed programming. In this case turn the unit off and then on if you want to restart the download again or remove the "**Hot key**" to abort the operation.

14. ALARM SIGNALS

Message	Cause	Outputs
"P1"	Room probe failure	Compressor output acc. to par. "Con" and "COF"
"P2"	Evaporator probe failure	Defrost end is timed
"P3"	Third probe failure	Outputs unchanged
"HA"	Maximum temperature alarm	Outputs unchanged.
"LA"	Minimum temperature alarm	Outputs unchanged.
"HA2"	Condenser high temperature	It depends on the "Ac2" parameter
"LA2"	Condenser low temperature	It depends on the "bLL" parameter
"dA"	Door open	Compressor and fans restarts
"EA"	External alarm	Output unchanged.
"CA"	Serious external alarm (i1F=bAL)	All outputs OFF.
"CA"	Pressure switch alarm (i1F=PAL)	All outputs OFF
"rtc"	Real time clock alarm	Alarm output ON; Other outputs unchanged; Defrosts according to par. "IdF" Set real time clock has to be set
rtF	Real time clock board failure	Alarm output ON; Other outputs unchanged; Defrosts according to par. "IdF" Contact the service

14.1 SILENCING BUZZER / ALARM RELAY OUTPUT

If "**tbA = y**", the buzzer and the relay are is silenced by pressing any key.
If "**tbA = n**", only the buzzer is silenced while the alarm relay is on until the alarm condition recovers.

14.2 ALARM RECOVERY

Probe alarms **P1**", "**P2",** "**P3**" start some seconds after the fault in the related probe; they automatically stop some seconds after the probe restarts normal operation. Check connections before replacing the probe.
Temperature alarms "**HA**", "**LA**" "**HA2**" and "**LA2**" automatically stop as soon as the temperature returns to normal values.
Alarms **"EA"** and **"CA"** (with i1F=bAL) recover as soon as the digital input is disabled.
Alarm "**CA"** (with i1F=PAL) recovers only by **switching off and on** the instrument.

14.3 OTHER MESSAGES

Pon	Keyboard unlocked.
PoF	Keyboard locked
noP	**In programming mode**: none parameter is present in Pr1 **On the display** or in dP2, dP3, dP4: the selected probe is nor enabled

15. TECHNICAL DATA

Housing: self extinguishing ABS.
Case: facia 38x185 mm; depth 48mm
Mounting : panel mounting in a 150x31 mm panel cut-out with two screws. ∅ 3 x 2mm.
Distance between the holes 165mm
Protection: IP20; **Frontal protection:** IP65 with frontal gasket mod RG-L. (optional)
Connections: Screw terminal block ≤ 2,5 mm² heat-resistant wiring and 6,3mm Faston
Power supply: 230Vac or. 110Vac or 24Vac ± 10%; **Power absorption:** 5VA max.
Display: 3 digits, red LED, 14,2 mm high; **Inputs**: Up to 3 NTC or PTC probes.
Digital input: 1 free voltage
Relay outputs: ***Total current on loads MAX. 20A***
compressor: relay SPST 20(8) A, 250Vac
light: relay SPST 7 A, 250Vac
Other output : buzzer (optional)
Serial output : TTL standard; **Communication protocol:** Modbus - RTU
Data storing: on the non-volatile memory (EEPROM).
Internal clock back-up: 24 hours (only for model with RTC)
Kind of action: 1B; **Pollution grade:** 2;**Software class:** A.;
Rated impulsive voltage: 2500V; **Over voltage Category**: II
Operating temperature: 0÷60 °C; **Storage temperature:** -30÷85 °C.
Relative humidity: 20÷85% (no condensing)
Measuring and regulation range: NTC probe: -40÷110°C (-40÷230°F);
PTC probe: -50÷150°C (-58÷302°F)
Resolution: 0,1 °C or 1°C or 1 °F (selectable); **Accuracy (ambient temp. 25°C)**: ±0,7 °C ±1 digit

16. CONNECTIONS

16.1 XW20LS – DRY CONTACTS

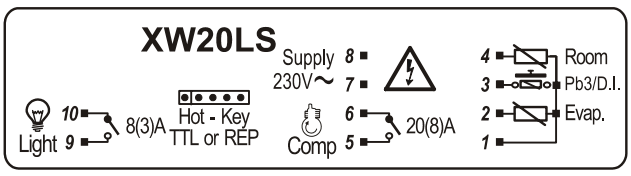

Supply: 120Vac or 24Vac: connect to terminals 7-8
The X-REP output is optional

16.2 XW20LS – DIRECT CONNECTIONS OF LOAD

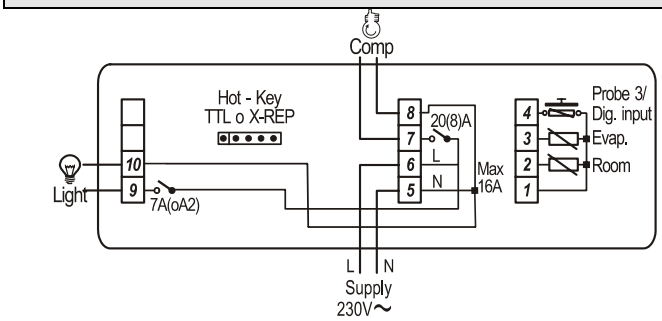

Supply: 120Vac or 24Vac: connect to terminals 5-6
The X-REP output is optional

17. DEFAULT SETTING VALUES

Label	Name	Range	°C/°F	Level
Set	Set point	LS÷US	3.0	- - -
rtc*	Real time clock menu	-	-	Pr1
Hy	Differential	0,1÷25.5°C/ 1÷ 255°F	2.0	Pr1
LS	Minimum set point	-50°C÷SET/-58°F÷SET	-50.0	Pr2
US	Maximum set point	SET÷110°C/ SET ÷ 230°F	110	Pr2
Ot	Thermostat probe calibration	-12÷12°C /-120÷120°F	0.0	Pr1
P2P	Evaporator probe presence	n=not present; Y=pres.	Y	Pr1
OE	Evaporator probe calibration	-12÷12°C /-120÷120°F	0.0	Pr2
P3P	Third probe presence	n=not present; Y=pres.	n	Pr2
O3	Third probe calibration	-12÷12°C /-120÷120°F	0	Pr2
OdS	Outputs delay at start up	0÷255 min	0	Pr2
AC	Anti-short cycle delay	0 ÷ 50 min	1	Pr1
rtr	P1-P2 percentage for regulation	0 ÷ 100 (100=P1 , 0=P2)	100	Pr2
CCt	Continuous cycle duration	0.0÷24.0h	0.0	Pr2
CCS	Set point for continuous cycle	(-55.0÷150,0°C) (-67÷302°F)	3.0	Pr2
COn	Compressor ON time with faulty probe	0 ÷ 255 min	15	Pr2
COF	Compressor OFF time with faulty probe	0 ÷ 255 min	30	Pr2
CH	Kind of action	cL÷Ht	cL	Pr1
CF	Temperature measurement unit	°C ÷ °F	°C	Pr2
rES	Resolution	in=integer; dE= dec.point	dE	Pr1
Lod	Probe displayed	P1;P2	P1	Pr2
rEd²	X-REP display	P1 – P2 – P3 – P4 – SEt – dtr	P1	Pr2
dLy	Display temperature delay	0 ÷ 20.0 min (10 sec.)	0.0	Pr2
dtr	P1-P2 percentage for display	1 ÷ 99	50	Pr2
EdF*	Kind of interval for defrost	rtc ÷in	in	Pr2
dFP	Probe selection for defrost termination	nP; P1; P2; P3; P4	nP	Pr2
dtE	Defrost termination temperature	-50 ÷ 50 °C	3	Pr1
IdF	Interval between defrost cycles	1 ÷ 120 ore	8	Pr1
MdF	(Maximum) length for defrost	0 ÷ 255 min	20	Pr1
dFd	Displaying during defrost	rt, it, SEt, DEF	it	Pr2
dAd	MAX display delay after defrost	0 ÷ 255 min	30	Pr2
ALP	Alarm probe selection	nP; P1; P2; P3; P4	P1	Pr2
ALc	Temperat. alarms configuration	rE= related to set; Ab = absolute	Ab	Pr2
ALU	MAXIMUM temperature alarm	Set÷110.0°C; Set÷230°F	110,0	Pr1
ALL	Minimum temperature alarm	-50.0°C÷Set/ -58°F÷Set	-50,0	Pr1
AFH	Differential for temperat. alarm recovery	(0,1°C÷25,5°C) (1°F÷45°F)	2,0	Pr2
ALd	Temperature alarm delay	0 ÷ 255 min	15	Pr2
dAO	Delay of temperature alarm at start up	0 ÷ 23h e 50'	1,3	Pr2
AP2	Probe for temperat. alarm of condenser	nP; P1; P2; P3; P4	nP	Pr2
AL2	Condenser for low temperat. alarm	(-55 ÷ 150°C) (-67÷ 302°F)	-40	Pr2
AU2	Condenser for high temperat. alarm	(-55 ÷ 150°C) (-67÷ 302°F)	110	Pr2
AH2	Differ. for condenser temp. alar. recovery	[0,1°C ÷ 25,5°C] [1°F ÷ 45°F]	5	Pr2
Ad2	Condenser temperature alarm delay	0 ÷ 254 (min.) , 255=nU	15	Pr2
dA2	Delay of cond. temper. alarm at start up	0.0 ÷ 23h 50'	1,3	Pr2
bLL	Compr. off for condenser low temper. alarm	n(0) - Y(1)	n	Pr2
AC2	Compr. off for condenser high temper alarm	n(0) - Y(1)	n	Pr2
i1P	Digital input polarity (13-14)	oP=opening;CL=closing	cL	Pr1
i1F	Digital input 1 configuration (13-14)	EAL, bAL, PAL, dor; dEF; Htr, AUS	dor	Pr1
did	Digital input alarm delay (13-14)	0÷255min	15	Pr1
Nps	Number of activation of pressure switch	0 ÷15	15	Pr2
odc	Compress status when open door	no; Fan; CPr; F_C	F-c	Pr2
rrd	Regulation restart with door open alarm	n – Y	y	Pr2
HES	Differential for Energy Saving	(-30°C÷30°C) (-54°F÷54°F)	0	Pr2
Hur*	Current hour	0 ÷ 23	-	rtc
Min*	Current minute	0 ÷ 59	-	rtc
dAY*	Current day	Sun ÷ SAt	-	rtc
Hd1*	First weekly holiday	Sun÷ SAt – nu	nu	rtc
Hd2*	Second weekly holiday	Sun÷ SAt – nu	nu	rtc
ILE*	Energy Saving cycle start during workdays	0 ÷ 23h 50 min.	0	rtc
dLE*	Energy Saving cycle length during workdays	0 ÷ 24h 00 min.	0	rtc
ISE*	Energy Saving cycle start on holidays	0 ÷ 23h 50 min.	0	rtc
dSE*	Energy Saving cycle length on holidays	0 ÷ 24h 00 min.	0	rtc
Ld1*	1st workdays defrost start	0 ÷ 23h 50 min. - nu	6.0	rtc
Ld2*	2nd workdays defrost start	0 ÷ 23h 50 min. - nu	13.0	rtc
Ld3*	3rd workdays defrost start	0 ÷ 23h 50 min. - nu	21.0	rtc
Ld4*	4th workdays defrost start	0 ÷ 23h 50 min. - nu	0.0	rtc
Ld5*	5th workdays defrost start	0 ÷ 23h 50 min. - nu	0.0	rtc
Ld6*	6th workdays defrost start	0 ÷ 23h 50 min. - nu	0.0	rtc

Label	Name	Range	°C/°F	Level
Sd1*	1st holiday defrost start	0 ÷ 23h 50 min. - nu	6.0	rtc
Sd2*	2nd holiday defrost start	0 ÷ 23h 50 min. - nu	13.0	rtc
Sd3*	3rd holiday defrost start	0 ÷ 23h 50 min. - nu	21.0	rtc
Sd4*	4th holiday defrost start	0 ÷ 23h 50 min. - nu	0.0	rtc
Sd5*	5th holiday defrost start	0 ÷ 23h 50 min. - nu	0.0	rtc
Sd6*	6th holiday defrost start	0 ÷ 23h 50 min. - nu	0.0	rtc
Adr	Serial address	1÷247	1	Pr2
PbC	Kind of probe	Ptc; ntc	ntc	Pr2
onF	on/off key enabling	nu, oFF; ES	oFF	Pr2
dP1	Room probe display	--	-	Pr2
dP2	Evaporator probe display	--	-	Pr2
dP3	Third probe display	--	-	Pr2
rSE	Real set	actual set	-	Pr2
rEL	Software release	--	1.8	Pr2
Ptb	Map code	--		Pr2

*** Only for model with real time clock**

[2] Only for XW20LS with X-REP output

Dixell S.p.A. Z.I. Via dell'Industria, 27
32010 Pieve d'Alpago (BL) ITALY
tel. +39 - 0437 - 98 33 - fax +39 - 0437 - 98 93 13
E-mail: dixell@dixell.com - http://www.dixell.com